DIMENSIONS :- METRIC (INCH)

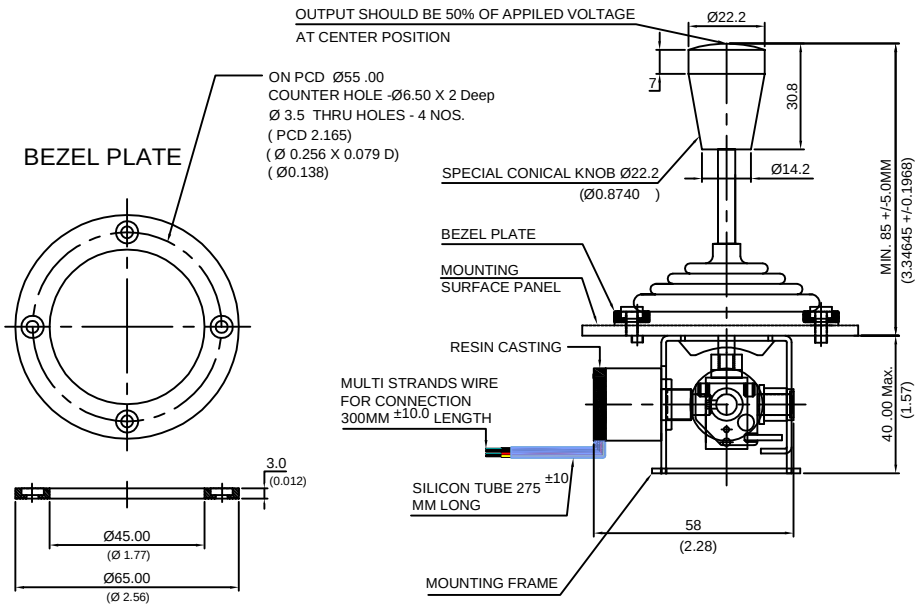

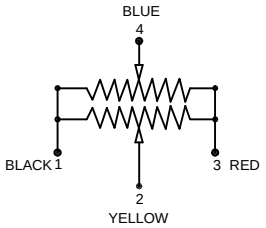

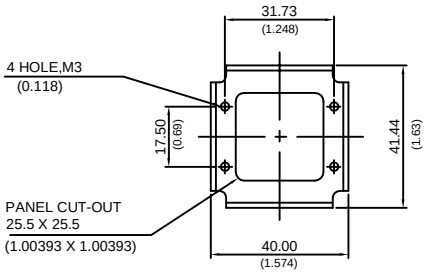

FEATURES:-

1. CONDUCTIVE PLASTIC LONG LIFE RESISTANCE ELEMENT.
2. ANODIZED ALUMINIUM PRECISION MACHINED BODY.
3. PRECIOUS METAL HIGH TECHNOLOGY WIPER GIVES NOISE FREE OUTPUT.

ELECTRICAL CHARACTERISTICS :--	UNITS	VALUE
RESISTANCE ELEMENT...	--	CONDUCTIVE PLASTIC
RESISTANCE RANGE...	Ohms	5 K
RESISTANCE TOLERANCE...	±%	20
BEST POSSIBLE RESI.TOLERANCE...	±%	10
STANDARD INDEPENDENT LINEARITY TOLERANCE...(IEC 393)...	±%	2.0
ELECTRICAL ANGLE...	DEGREES	45°±5° FOR BOTH AXIS
ELECTRICAL DEAD ZONE...	DEGREES	5° FOR BOTH AXIS
MOVEMENT OF STICK...	DEGREES	25 - 0 - 25
RESOLUTION...	--	ESSENTIALLY INFINITE
TEMPERATURE COEFFICIENT OF RESISTANCE(TCR)...	ppm/deg C	± 400
POWER RATING @ 70°C...	WATTS	1.0
INSULATION RESISTANCE @ 500 VDC...	M Ohms	1000
DIELECTRIC STRENGTH @ 50 HZ...	V ac	500
MAXIMUM WIPER CURRENT...	mAmps	1
SHORT TIME WIPER CURRENT 10 SEC. ...	mAmps	10
END VOLTAGE AS A % OF APPLIED VOLTAGE...	%	LESS THAN 0.5
ENVIRONMENTAL CHARACTERISTICS		
OPERATING TEMPERATURE...	DEGREE C	-40 to +105
ROHS COMPLIANCE...	--	YES
PERFORMANCE		
LIFE ...	NO OF OPERATIONS	2,000,000
MATERIAL OF CONSTRUCTION:-		
HOUSING...	--	ALUMINUM ANODIZED
SHAFT...	--	STAINLESS STEEL
TERMINAL...	--	7/38 MULTI STRANDS TEFLON WIRE (4WIRE'S)
MOUNTING FACILITY...	--	FRAME & S.S. PLATE WITH M3 TAF
RUBBER BOOT...	--	NITRIAL RUBBER
MOUNTING FLANGE...	--	STAINLESS STEEL

RESENSO
SMARTER SENSING AND CONTROL

JOYSTICK CONTROLLER

MODEL J-102 (001)

(TWO AXIS)

FIRST ISSUE : 07/05/2015	SCALE :1:1
TOLERANCE DIN-ISO 2768-1 (1991-06) (TOLERANCE CLASS-MEDIUM)	**PART NO.** **U 169001**
CUSTOMER DRAWING REF NO NA	REV - 01 270615
CUSTOMER : STANDARD	SHEET 1 Of 1